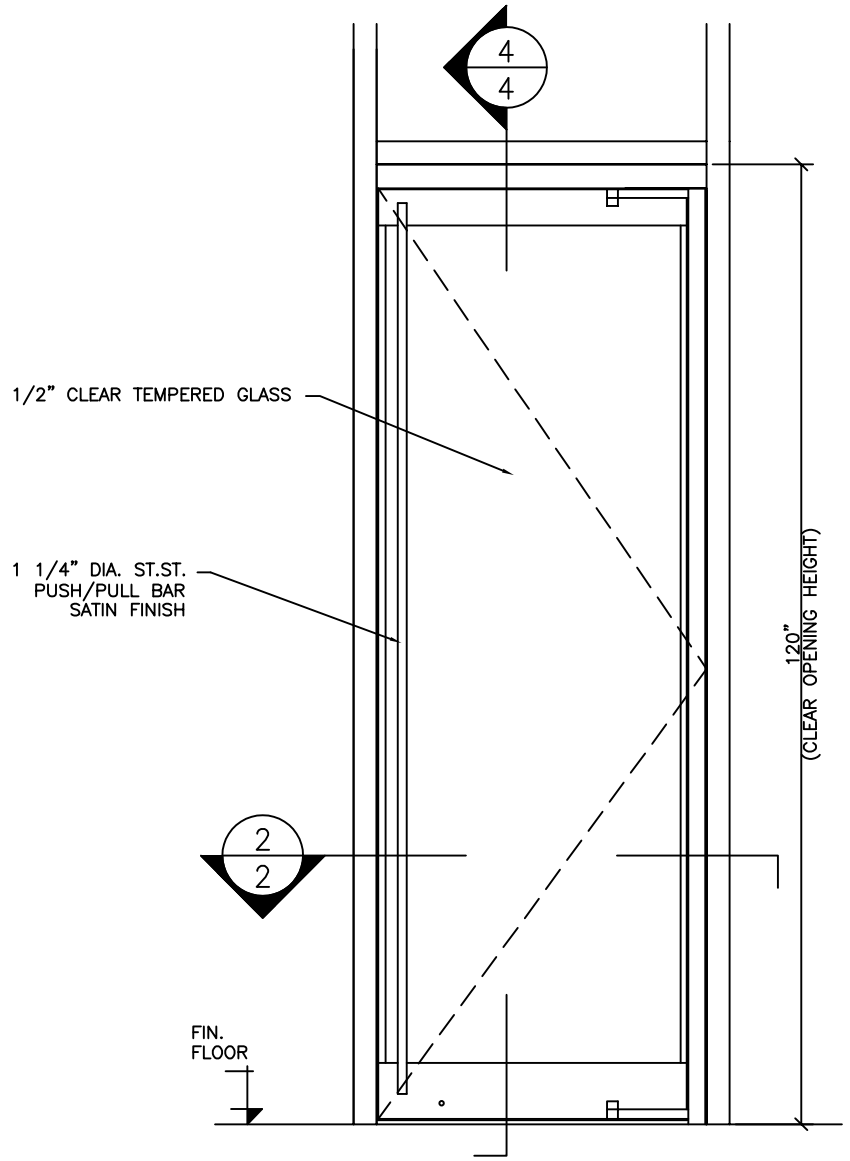

ELEVATION

INTERIOR

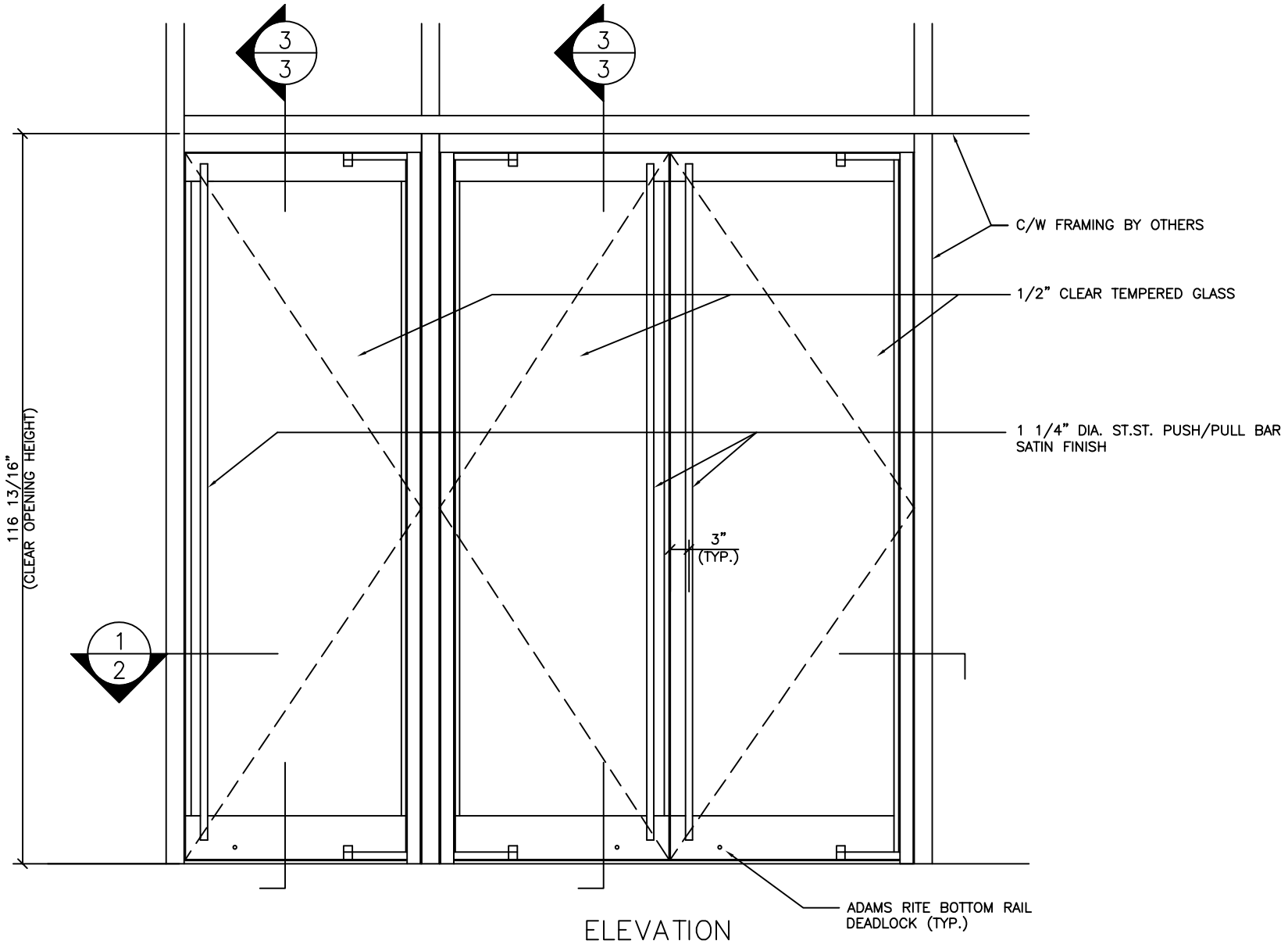

ELEVATION

INTERIOR

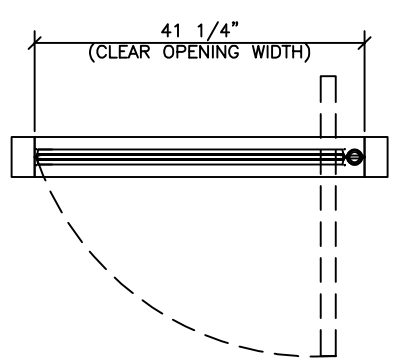

EXTERIOR

PLAN

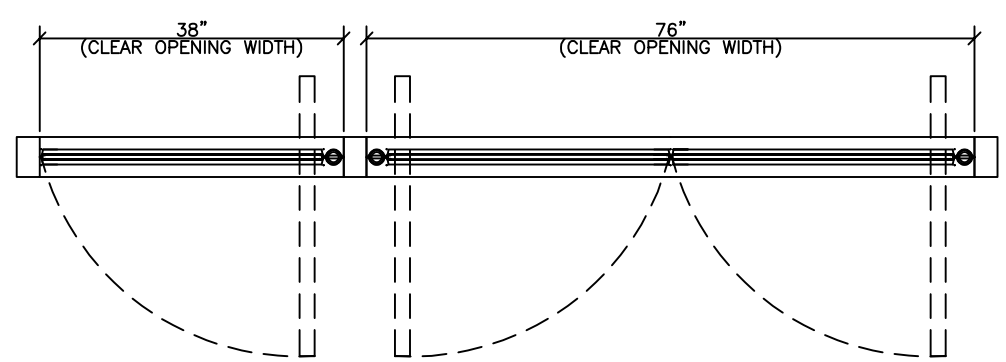

EXTERIOR

PLAN

SHOP NOTE:

FINISH= CHAMPAGNE ANODIZED
BY DEPENDABLE ANODIZING

1/2" TEMPERED GLASS= CLEAR

DOOR HARDWARE

- C.J. RUSH TYPE BALANCED DOOR HARDWARE
- OVERHEAD CONCEALED LCN 2030 SERIES CLOSER
- ADAMS RITE 1830
- PUSH–PULLS – CUSTOM – AS SHOWN
- 1 SET WEATHERSTRIPPING

Date	REVISIONS	By	Issue

No.	ISSUED	Date
	FOR APPROVAL	?

IMPORTANT NOTICE

C.J. Rush wishes to bring to your attention the following, for which we assume NO RESPONSIBILITY:

(1) The use of these drawings by other parties is the sole responsibility of that party as to site conditions, measurements, etc,.

(2) Movement of structures by forces causing mis–alignment and improper function of our product.

(3) Results of glass breakage causing bodily harm through improper use or mischief.

SPECIAL REFERENCE NOTE

Very often the method of manufacturing as shown on these shop drawings are a development of the skills of the company. Any reproduction and or distribution in whole or in part, without expresed or written consent is strictly prohibited.

C.J. Rush

RUSH ENTRANCE SYSTEMS LTD.

65 RIVIERA DRIVE
MARKHAM, ONT.
CANADA, L3R 5J6

Tel. 888–301–5407
905–944–8005
Fax 905–944–8006

EXTERIOR BALANCED DOORS

PLAN/ELEVATION

BUILDING: ?	
LOCATION: ?	
ARCH–ENG.: ?	
CONTRACTOR:	
Drawn by: ?	Job No. ?
Checked by:	
Scale: 1"=1'–0"	Dwg. No. 001
Date: ?	
Finish: AS SHOWN	

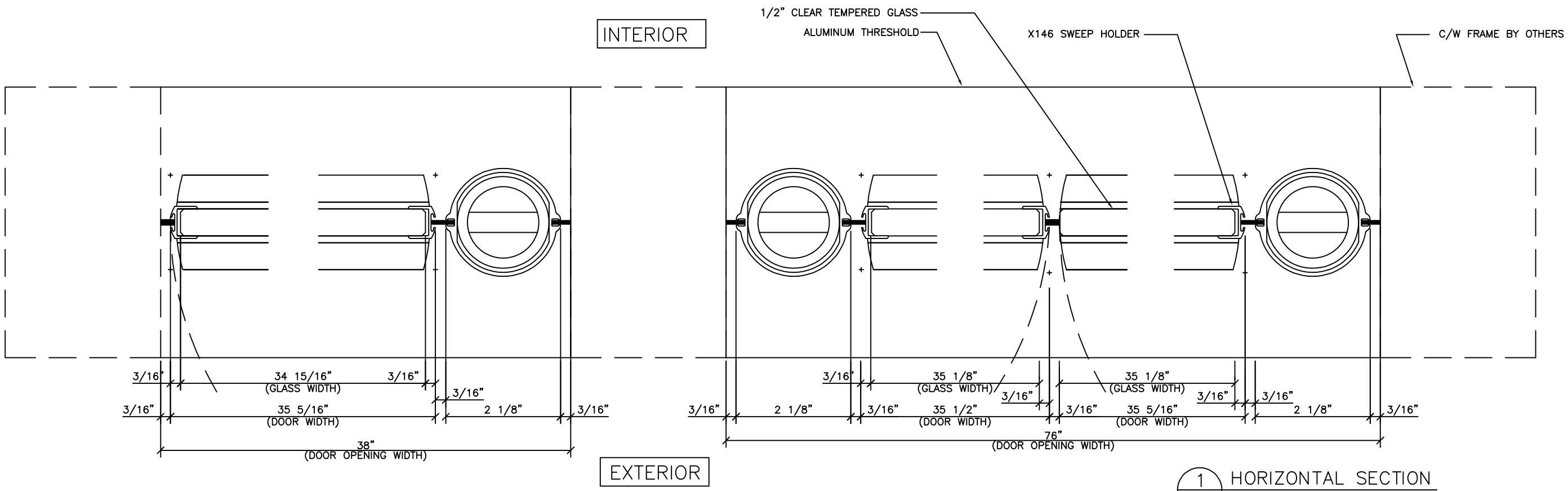

1/1 HORIZONTAL SECTION

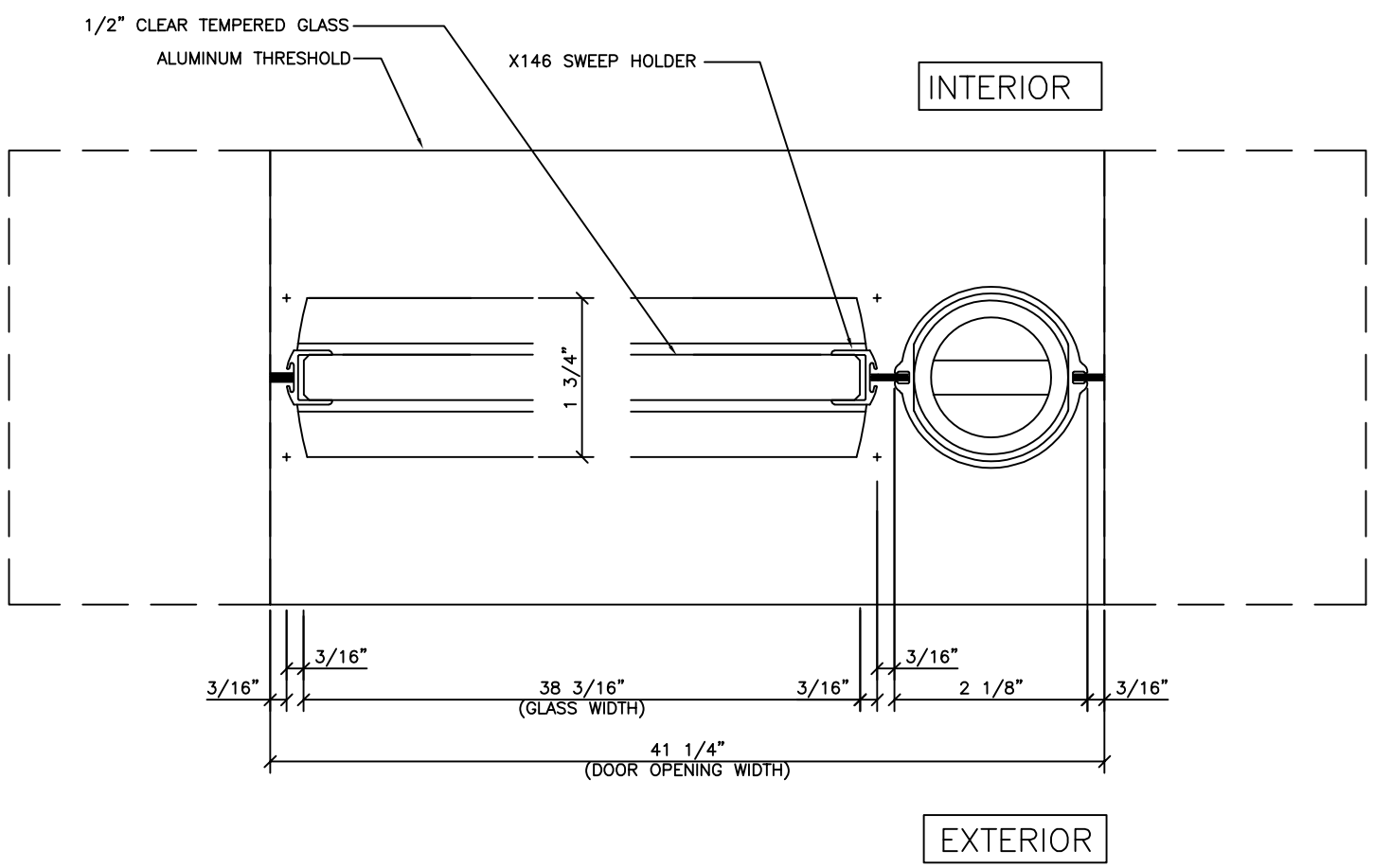

2/1 HORIZONTAL SECTION

Date	REVISIONS	By	Issue

No.	ISSUED	Date

IMPORTANT NOTICE

C.J. Rush wishes to bring to your attention the following, for which we assume NO RESPONSIBILITY:

(1) The use of these drawings by other parties is the sole responsibility of that party as to site conditions, measurements, etc,.

(2) Movement of structures by forces causing mis-alignment and improper function of our product.

(3) Results of glass breakage causing bodily harm through improper use or mischief.

SPECIAL REFERENCE NOTE

Very often the method of manufacturing as shown on these shop drawings are a development of the skills of the company. Any reproduction and or distribution in whole or in part, without expresed or written consent is strictly prohibited.

C.J. Rush

RUSH ENTRANCE SYSTEMS LTD.
65 RIVIERA DRIVE
MARKHAM, ONT.
CANADA, L3R 5J6
Tel. 888-301-5407
905-944-8005
Fax 905-944-8006

EXTERIOR BALANCED DOORS
HORIZONTAL SECTION

BUILDING: ?	
LOCATION: ?	
ARCH-ENG.: ?	
CONTRACTOR:	
Drawn by: ?	Job No. ?
Checked by:	
Scale: FULL SIZE	Dwg. No. 002
Date: ?	
Finish: AS SHOWN	

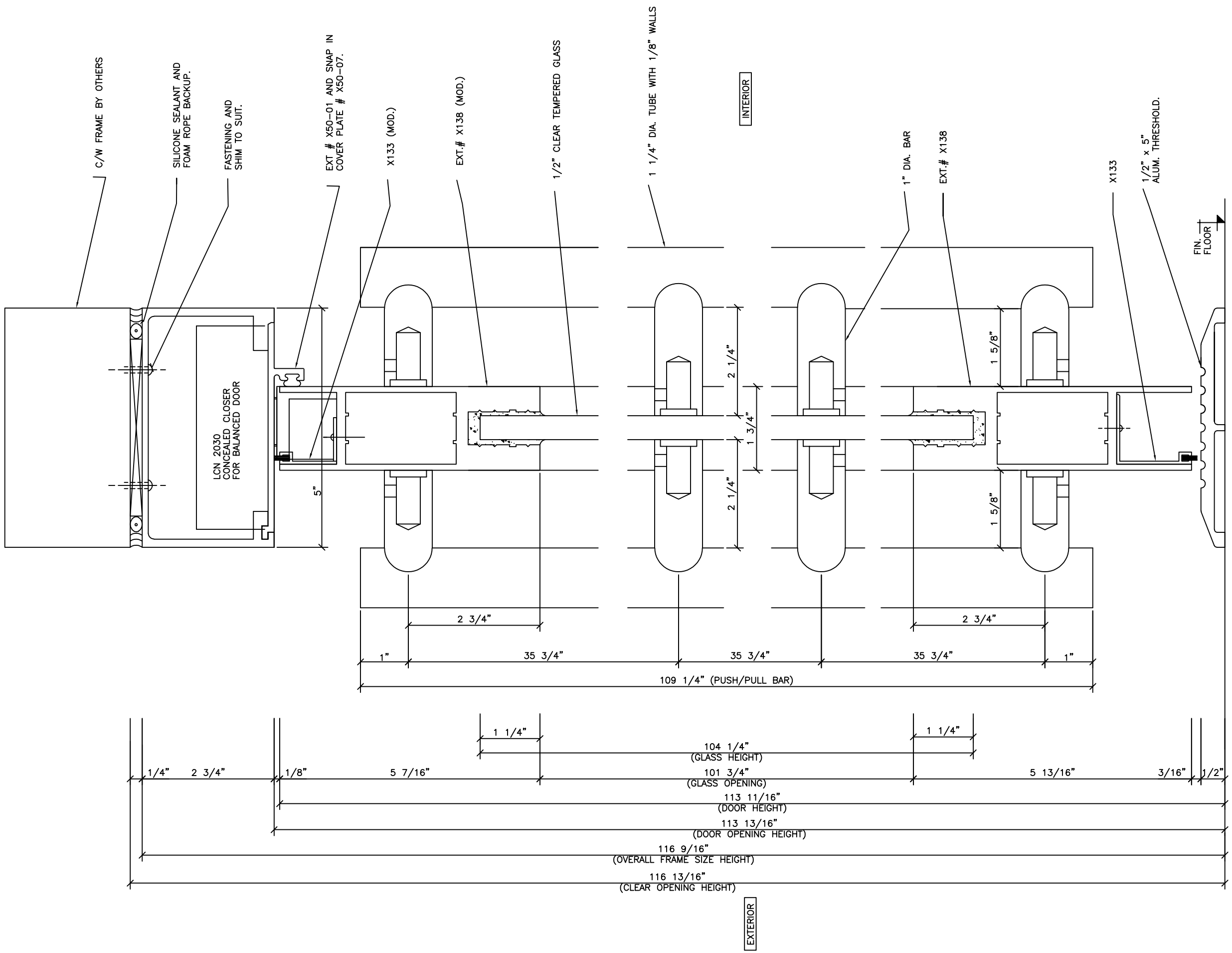

3/1 VERTICAL SECTION

Date	REVISIONS	By	Issue

No.	ISSUED	Date

IMPORTANT NOTICE

C.J. Rush wishes to bring to your attention the following, for which we assume NO RESPONSIBILITY:

(1) The use of these drawings by other parties is the sole responsibility of that party as to site conditions, measurements, etc,.

(2) Movement of structures by forces causing mis-alignment and improper function of our product.

(3) Results of glass breakage causing bodily harm through improper use or mischief.

SPECIAL REFERENCE NOTE

Very often the method of manufacturing as shown on these shop drawings are a development of the skills of the company. Any reproduction and or distribution in whole or in part, without expresed or written consent is strictly prohibited.

C.J. Rush

RUSH ENTRANCE SYSTEMS LTD

65 RIVIERA DRIVE
MARKHAM, ONT.
CANADA, L3R 5J6

Tel. 888-301-5407
905-944-8005
Fax 905-944-8006

EXTERIOR BALANCED DOORS
VERTICAL SECTION

BUILDING: ?	
LOCATION: ?	
ARCH-ENG.: ?	
CONTRACTOR:	
Drawn by: ?	Job No. ?
Checked by:	
Scale: FULL SIZE	Dwg. No. 003
Date: ?	
Finish: AS SHOWN	

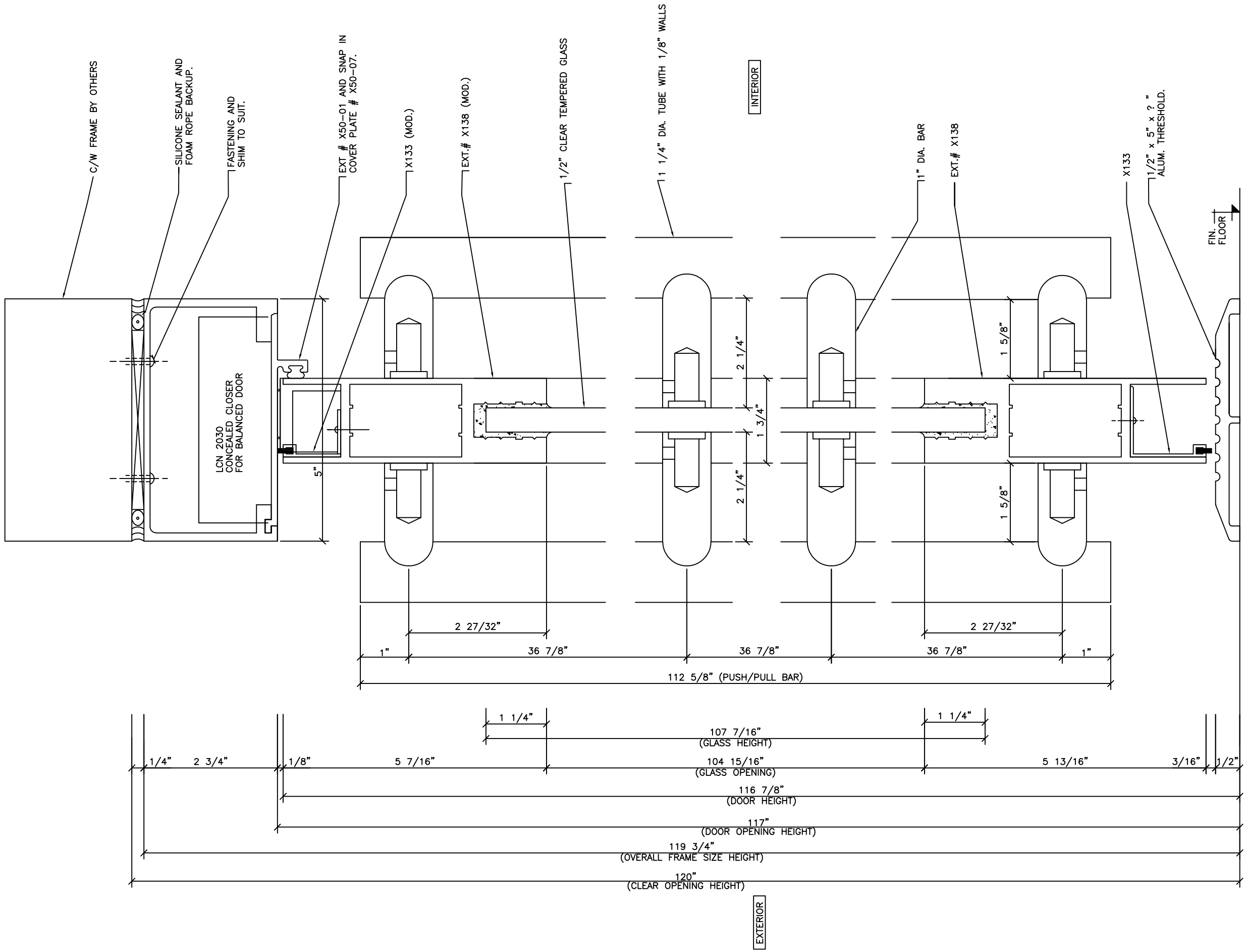

4/1 VERTICAL SECTION

Date	REVISIONS	By	Issue

No.	ISSUED	Date

IMPORTANT NOTICE

C.J. Rush wishes to bring to your attention the following, for which we assume NO RESPONSIBILITY:

(1) The use of these drawings by other parties is the sole responsibility of that party as to site conditions, measurements, etc,.

(2) Movement of structures by forces causing mis-alignment and improper function of our product.

(3) Results of glass breakage causing bodily harm through improper use or mischief.

SPECIAL REFERENCE NOTE

Very often the method of manufacturing as shown on these shop drawings are a development of the skills of the company. Any reproduction and or distribution in whole or in part, without expresed or written consent is strictly prohibited.

C.J. Rush

RUSH ENTRANCE SYSTEMS LTD

65 RIVIERA DRIVE
MARKHAM, ONT.
CANADA, L3R 5J6

Tel. 888-301-5407
905-944-8005
Fax 905-944-8006

EXTERIOR BALANCED DOORS
VERTICAL SECTION

BUILDING: ?	
LOCATION: ?	
ARCH-ENG.: ?	
CONTRACTOR:	
Drawn by: ?	Job No. ?
Checked by:	
Scale: FULL SIZE	Dwg. No. 004
Date: ?	
Finish: AS SHOWN	