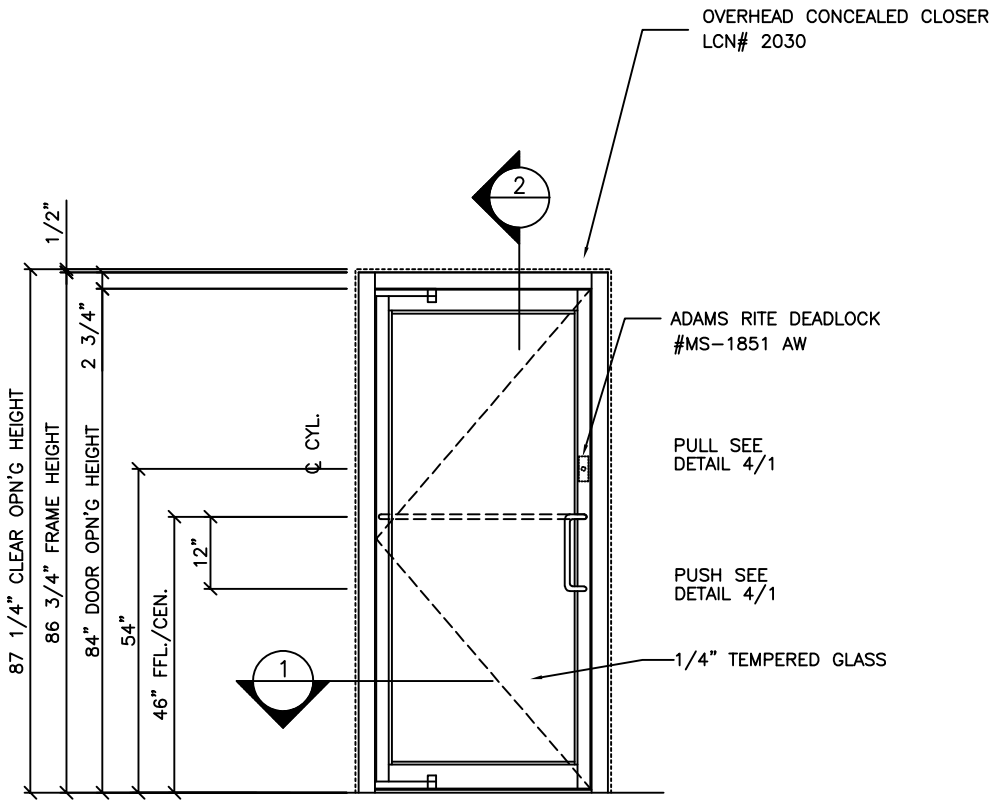

ENTRANCE ELEVATION

1 REQUIRED

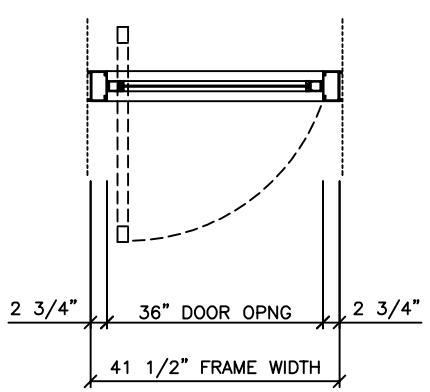

ENTRANCE PLAN

SCALE: 3/4"= 1'-0"

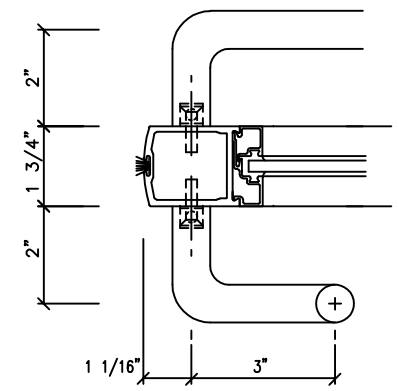

SECTION: A-A.

INTERIOR

SHOP NOTE:
FOR LCN 2030 CONCEALED CLOSER
MINIMUM SIZE OF DOOR OPENING
WIDTH MUST BE 36" FOR SINGLE
DOORS, AND 72" FOR PAIRS.

LCN 1461 EXPOSED CLOSER
TO BE USED FOR DOORS UNDER 36" WIDTH

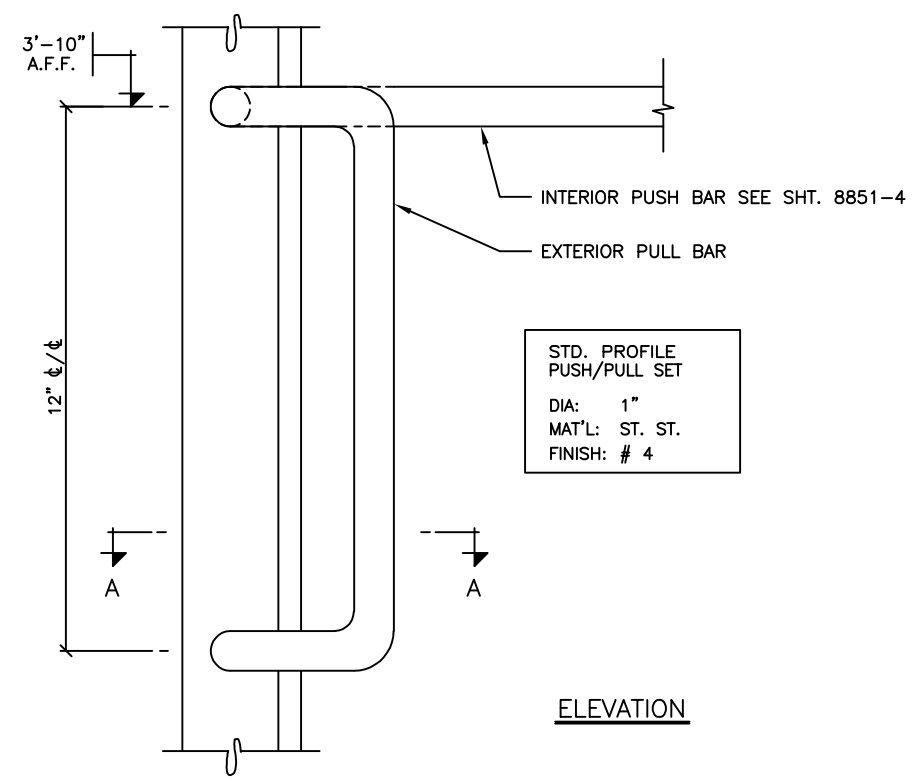

STD. PROFILE
PUSH/PULL SET

DIA: 1"
MAT'L: ST. ST.
FINISH: # 4

ELEVATION

4 DETAIL - PUSH/PULLS

SHOP NOTE:

FINISH= K17 CLEAR ANODIZED
1/4" TEMPERED GLASS= CLEAR

DOOR HARDWARE

- STANLEY / RUSH TYPE BALANCED DOOR HARDWARE
- OVERHEAD CONCEALED LCN 2030 SERIES CLOSER
- ADAMS RITE MS 1851-AW WITH CYLINDER AT EXT., THUMBTURN AT INT.
- 1/2"X5" ALUMINUM EXTRUDED THRESHOLD (MILL FIN.)

Date	REVISIONS	By	Issue

No.	ISSUED	Date

IMPORTANT NOTICE

C.J. Rush wishes to bring to your attention the following, for which we assume NO RESPONSIBILITY:

(1) The use of these drawings by other parties is the sole responsibility of that party as to site conditions, measurements, etc,.

(2) Movement of structures by forces causing mis-alignment and improper function of our product.

(3) Results of glass breakage causing bodily harm through improper use or mischief.

SPECIAL REFERENCE NOTE

Very often the method of manufacturing as shown on these shop drawings are a development of the skills of the company. Any reproduction and or distribution in whole or in part, without expresed or written consent is strictly prohibited.

C.J. Rush

65 RIVIERA DRIVE
MARKHAM, ONT.
CANADA, L3R 5J6

Tel. 888-301-5407
905-944-8005
Fax 905-944-8006

2010 SERIES
BALANCED DOOR
PLAN / ELEVATION

BUILDING	
LOCATION	
ARCH-ENG.	
CONTRACTOR	
Drawn by	Job No.
Checked by	
Scale	
Date	Dwg. No. 01
Finish	

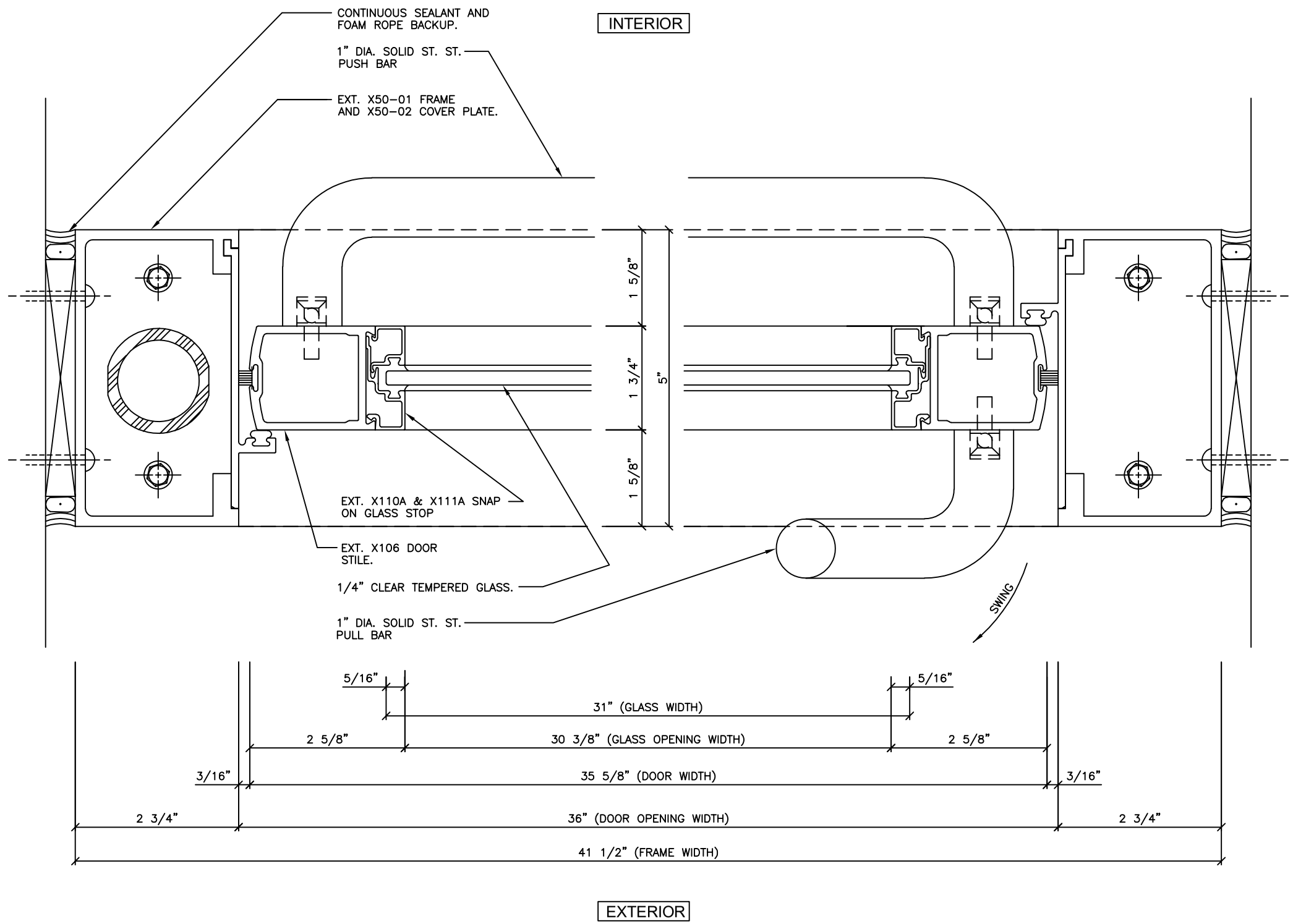

1 PLAN / DETAILS

Date	REVISIONS	By	Issue

No.	ISSUED	Date

IMPORTANT NOTICE

C.J. Rush wishes to bring to your attention the following, for which we assume NO RESPONSIBILITY:

(1) The use of these drawings by other parties is the sole responsibility of that party as to site conditions, measurements, etc,.

(2) Movement of structures by forces causing mis-alignment and improper function of our product.

(3) Results of glass breakage causing bodily harm through improper use or mischief.

SPECIAL REFERENCE NOTE

Very often the method of manufacturing as shown on these shop drawings are a development of the skills of the company. Any reproduction and or distribution in whole or in part, without expresed or written consent is strictly prohibited.

C.J. Rush

65 RIVIERA DRIVE
MARKHAM, ONT.
CANADA, L3R 5J6

Tel. 888-301-5407
905-944-8005
Fax 905-944-8006

BALANCED DOOR
PLAN / DETAILS

BUILDING	
LOCATION	
ARCH-ENG.	
CONTRACTOR	
Drawn by	Job No.
Checked by	
Scale	Dwg. No. 02
Date	
Finish	

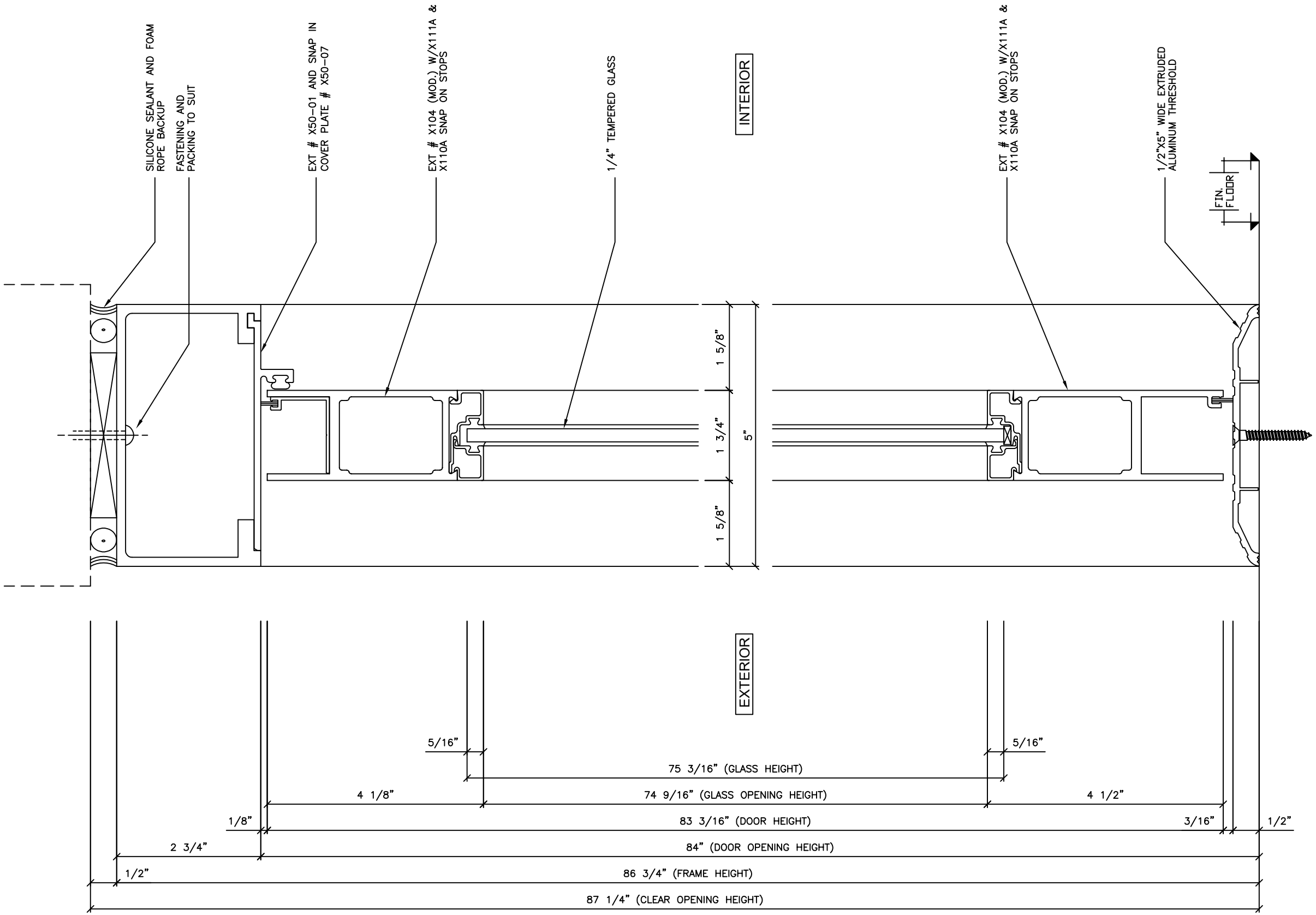

1 SECTION / DETAILS

Date	REVISIONS	By	Issue

No.	ISSUED	Date

IMPORTANT NOTICE

C.J. Rush wishes to bring to your attention the following, for which we assume NO RESPONSIBILITY:

(1) The use of these drawings by other parties is the sole responsibility of that party as to site conditions, measurements, etc,.

(2) Movement of structures by forces causing mis-alignment and improper function of our product.

(3) Results of glass breakage causing bodily harm through improper use or mischief.

SPECIAL REFERENCE NOTE

Very often the method of manufacturing as shown on these shop drawings are a development of the skills of the company. Any reproduction and or distribution in whole or in part, without expresed or written consent is strictly prohibited.

C.J. Rush

RUSH ENTRANCE SYSTEMS LTD

65 RIVIERA DRIVE
MARKHAM, ONT.
CANADA, L3R 5J6

Tel. 888-301-5407
905-944-8005
Fax 905-944-8006

BALANCED DOOR
SECTION / DETAILS

BUILDING	
LOCATION	
ARCH-ENG.	
CONTRACTOR	
Drawn by	Job No.
Checked by	
Scale	Dwg. No.
Date	03
Finish	